FREQUENTIS AG (DVR 0364797)
Innovationsstraße 1, 1100 Vienna, Austria

30-06036XY ORDER NUMBER (SEE VARIANTS)	**Operational Touch Screen Position** FUNCTION	**iPOS(x)-F YZ** NAME (SEE VARIANTS)

Mechanical Data

Casing (W × H × D*)

Type STD (*)incl. FP + feet)	298 × 216 × 82.7 mm³
Type HD (*)incl. FP + feet)	294.2 × 245 × 91.1 mm³
Material	sheet metal St, 1 mm
Mass	see Variants

Front panel (W × H × D)

STD (5 HU x 65 HP)	330 × 220 × 5 mm³
drilling (∅ 4.5, M4, W × H/centre-centre)	315 × 205 mm²
HD (6 HU x 60 HP)	304.5 × 261.8 × 2.5(u/d) / 5(l/r) mm³
drilling (∅ 3.2, M2.5, W×H/cent.-cent.)	289.6 × 255.8 mm²

Environment

	Storage	*Operation*
Temperature	-20 to +70 °C	+5 to +40 °C
Relative humidity (without dewing)		10 to 90 %

Electrical Data

Input voltage	24 V DC	+5/-20%
Current consumption (excl. AUX supply)		≤2 A
Max. power consumption (incl. AUX supply)		≤144 W **)

**) If more than one loudspeaker is used on an AUX line, those speaker(s) require an additional power supply.

For key parameters, see also *Variants* on next page.

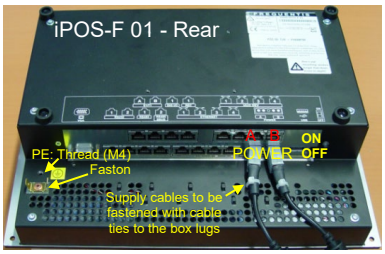

Short Description

The module serves as operational touch screen position for Frequentis Voice Communication Systems; it is optimised for a user interface with:

- 12.1" low-reflection, high-colour-saturation TFT-LCD, resolution 800×600, 262144 colours (for brightness and contrast, see Variants below)
- Analog resistive, highly transparent touch sensor, reaction time <15 ms
- Internal speaker for key-click and ringing indication

Capable to transmit and receive high quality and high-performance VoIP in safety-critical applications, the iPOS introduces a new concept of auxiliary devices in supporting any customer specific audio devices. Operated with an embedded LINUX-OS, it extends the existing combinations of position electronics (X-EPOS) and PowerPanels (PP0X), or the compact operator position cPOS/ePOSA.
Via one of the serial interfaces (with line levels acc. RS232, RS485) USB, or 100BaseTx Ethernet, resp., the application program, as well as the display and interaction code can be downloaded to the memory.

Avoid damage to the equipment:

- **Do not spill any liquid over the operating module!**
- **Do not touch the display with angular or sharp objects!**

Approvals

Electrical Safety	IEC60950-1(05)+A1(09)+A2(13); IEC62368-1(18) EN60950-1(06)+A1(10)+A11(09)+A12(11)+A2(13); EN/IEC62368-1(20)+A1(20)
EMC	FCC Part15(17 Ed.+23.11.20); EN300386(V2.1.1+V2.2.0) ICES-003 Issue6(16,up.17)+Issue7(15.10.20)
Emission	EN55022(10)+AC(11); IEC/CISPR22(02+08)
Immunity	EN/IEC61000-6-2(05+19),-6-3(07)+A1(11)+AC(12) EN55024(10)+A1(15); EN55032(15)+AC(16); EN55035(17)
Climatic	EN60068-2-1(Aa,Ad),-2(Ba,Bd),-14(Nb), -78(Ca)(00)

freigegeben
released

Connectors & Controls	Signal	Type	Description	
			None of these lines may be connected to public telecom lines!	
[+] ☼ [-]	-	Control	Adjustment of LCD brightness	
E1/T1 A, B	E1/T1	2× 8-pin RJ45, fm	Connection of 2 E1/T1 lines (e.g. TDM signals like PCM) to the VCS	
E1/T1 C, D		2× 8-pin RJ45, fm	Connection of 2 E1/T1 lines (e.g. duplicated PCM lines to a duplicated VCS (A/B))	
DIG I/O, REC	4-wire	2× 8-pin RJ45, fm	Digital input/output; analog recorder connection	
iAUX DEV 1, 2, 3, 4		4× 8-pin RJ45, fm	Daisy-chain (100BaseTx) of 1 to 4 auxiliary devices, each with protection circuit	
with ***4x 2 LEDS***		green	blinking = activity on line	Status indications
		green	ON = established link	for each daisy-chain
iAUX DEV 3, 4		2× MT-RJ	100BaseFx fibre optics connection	
VGA	RGB	15-pin Sub-HD, fm	Connection of a supplementary VGA monitor	
RS232 1, 2, 3	2-wire	4(5)× 8-pin RJ45, fm	Serial 2-wire interfaces 1, 2, 3 (RS232-compatible)	
RS485 (1)	2/4-wire		2/4-wire serial interface (4-w RS485 & 4-w RS422 compatible)	
RS485 SBUS (2)	2/4-wire		2/4-wire serial interface (RS485/422-compatible) for SBUS connection	
Ethernet 1, 2, 3, 4		4× 8-pin RJ45, fm	Ethernet (100BaseTx) jacks, with protection circuit for external network connect. 1 to 4	
with ***4x 2 LEDS***		green	blinking = activity on line	Status indications
		green	ON = established link	for each Ethernet connection
Ethernet 1, 2		2× MT-RJ	100BaseFx Ethernet jacks	
POWER A, B	24 V DC	5-pin Header (Wago)	DC input circuits A, B; X-COM-SYS connector with coding pin	
USB	serial	USB jack type A	USB.2.0 compatible	
⏚	PE	2× Faston / M4 thread	connection to the site's equipotential bonding system (prepared for earth screw M4)	
ON – OFF	-	Switch	ON/OFF switch	

Violet	F09,10,12, 2-F10 only
Light blue	F06,07,08 only
Turquoise	F09,10,12,2-F10 only
Orange	not available on variants with fibre optics interfaces

For power supply, an AC/DC or DC/DC voltage converter has to be interconnected on the supply line.

Violet	F09,10,12, 2-F10 only
Light blue	variants with fibre optics interfaces

Variants	Order Number	Sub-boards iAUX	iPOSIO	iPOS	Flash Memory	Brightness [cd/m²]	12.1" LCD Contrast	LCD Type	Mechanic Type	Mass [g]	Typical Power Consumption with 2 iPIP(s) & 2 iLSP: Description	
iPOS-F 01	30-0603600	o1.oo	o1.oo	o1.oo	32 MB	450	800:1	LED	STD	3715	4×ETH, 2*E1/T1, 4×AUX, 4×RS; RAL7024	29 W
iPOS-F 02	30-0603601	o1.oo	o1.oo	o1.oo	32 MB	1000	500:1	HB	HD	4470	= F 01 with high-bright LCD "HB"	36 W
iPOS-F 03	30-0603602	o1.oo	o1.oo	o1.oo	32 MB	450	800:1	LED	STD	3720	= F 01 with front in RAL7040	29 W
iPOS-F 04	30-0603603	o1.oo	o1.oo	o1.1o	64 MB	450	800:1	LED	STD	3320	= F 01 with increased Flash memory	29 W
iPOS-F 05	30-0603604	o1.oo	o1.oo	o1.1o	64 MB	1000	500:1	HB	HD	4460	= F 02 with increased Flash memory	36 W
iPOS-F 06	30-0603605	o2.oo	o1.oo	o1.1o	64 MB	450	800:1	LED	STD	3850	= F 04 + Aux-board with 2×100BaseFx	30 W
iPOS-F 07	30-0603606	o1.oo	o2.oo	o1.1o	64 MB	450	800:1	LED	STD	3920	= F 04 + I/O-board with 2×100BaseFx	30 W
iPOS-F 08	30-0603607	o2.oo	o2.oo	o1.1o	64 MB	450	800:1	LED	STD	4050	= F 04 + Aux & I/O-board with 2×100BaseFx	31 W
iPOS-F 09	30-0603608	o3.oo	o1.oo	o1.1o	64 MB	450	800:1	LED	STD	3780	= F 04 + 4 FPGA controlled E1/T1 lines	29 W
iPOS-F 10	30-0603609	o3.oo	o1.oo	o1.1o	64 MB	1000	500:1	HB	HD	4545	= F 09 with high-bright LCD	36 W
iPOS-F 11	30-0603610	o1.oo	o1.oo	o1.1o	64 MB	450	600:1	LED	HDT	3535	= F 04 with "HD" panel but different Touch	29 W
iPOS2-F 12	30-0603611	o3.oo	o1.oo	o1.2o	64 MB	450	800:1	LED	STD	3800	= F 09 w/o FP logo, enhanced main board	29 W
iPOS2-F 04	30-0603612	o1.oo	o1.oo	o1.2o	64 MB	450	800:1	LED	STD	3495	= F 04 with enhanced main board	29 W
iPOS2-F 05	30-0603613	o1.oo	o1.oo	o1.2o	64 MB	1000	500:1	HB	HD	4470	= F 05 with enhanced main board	36 W
iPOS2-F 08	30-0603614	o2.oo	o2.oo	o1.2o	64 MB	450	800:1	LED	STD	3830	= F 08 with enhanced main board	31 W
iPOS2-F 04 BW	30-0603615	o1.oo	o1.oo	o1.2o	64 MB	450	600:1	CCFL	STD	3695	= iPOS2-F 04 with CCFL backlight LCD	29 W
iPOS-F 14	30-0603616	o1.oo	o1.oo	o1.1o	64 MB	450	800:1	LED	PP05F	3400	= F 04 with different front panel frame	29 W
iPOS-F 15	30-0603617	o1.oo	o1.oo	o1.1o	64 MB	1000	500:1	HB	HDT	4470	= F 05 with "HB" panel but different Touch	36 W
iPOS-F 16	30-0603618	o1.oo	o1.oo	o1.oo	32 MB	1000	500:1	HB	HDT	4480	= F 02 with "HB" panel but different Touch	36 W
iPOS2-F 03	30-0603619	o1.oo	o1.oo	o1.2o	64 MB	450	800:1	LED	STD	3465	= 30-0603612 with front in RAL7040	29 W
iPOS2-F 25	30-0603620	o1.oo	o1.oo	o1.2o	64 MB	1500	800:1	nHB	HD	3830	= 30-0603613 with different LCD	29 W
iPOS3-F 04	30-0603621	o1.oo	3o1.oo	3o1.2o	128 MB	450	800:1	LED	STD	3495	= 2-F 04 with enhanced main & IO board	29 W
iPOS3-F 05	30-0603622	o1.oo	3o1.oo	3o1.2o	128 MB	1500	800:1	nHB	HD	3830	= 2-F 25 with enhanced main & IO board	29 W
iPOS3-F 08	30-0603623	o2.oo	3o2.oo	3o1.2o	128 MB	450	800:1	LED	STD	3780	= 2-F 08 with enhanced main & IO board	31 W
iPOS2-F 10	30-0603624	o3.oo	o1.oo	o1.1o	64 MB	1000	500:1	nHB	HD	4545	= 2- F 25 with high-bright LCD	36 W
iPOS3-F 24	30-0603625	o1.o1	3o1.oo	3o1.2o	128 MB	450	800:1	LED	STD	3495	= 3-F 04 with different AUX board (E1/T1 connectors disabled)	29 W
iPOS3-F 18	30-0603626	o2.oo	3o2.oo	3o1.2o	128 MB	450	800:1	LED	STD	3780	= 3-F 08 without Frequentis logo	31 W
iPOS3-F 06	30-0603627	o1.o1	3o1.oo	3o1.2o	128 MB	450	800:1	LED	STD	3495	= 3-F 04 without DFALC components on AUX board	29 W

freigegeben
released

COPYRIGHT FREQUENTIS 2006

30-0603600-04,-10,-12,-13,-15,-16,-17,-20,-21,-25,-27 ORDER NUMBER	**iPOS Standard Layout F01,-05,-11,-14,-15, 2/-3-F04,-05,-06,-04BW,3-F24** FUNCTION NAME
Example of the connector layout for variants with sub-boards iAUX 01.00 (30-0603625 with iAUX 01.10 with disabled E1/T1 connectors) and iPOSIO 01.00 (30-0603621 and -25 with iPOSIO3 01.00) (supporting electrical connections only).	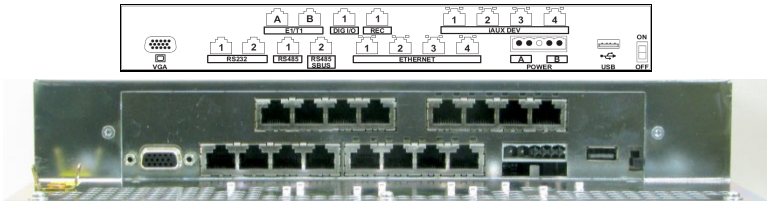
30-0603605, -06, -07, -14, -23, -26 ORDER NUMBER	**iPOS with Optical Fibre Interfaces F06, -07, -08, 2-F08, 3-F08, 3-F18** FUNCTION NAME
Example of the connector layout for variants with sub-boards iAUX 02.00 and/or iPOSIO 02.00 (supporting optical fibre connections).	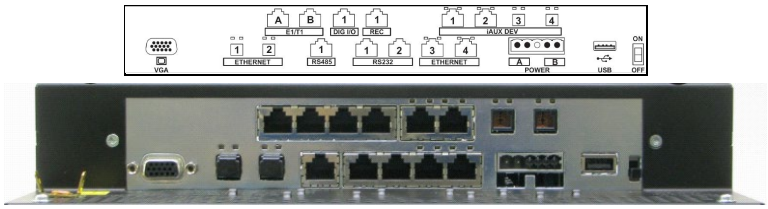
30-0603608, -09, -11, -24 ORDER NUMBER	**iPOS with Duplicated PCM Connections F09, -10, -12, 2-F10** FUNCTION NAME
Example of the connector layout for variants with sub-board iAUX 03.00 (supporting 2 additional E1/T1 interfaces and a 3rd RS232 interface).	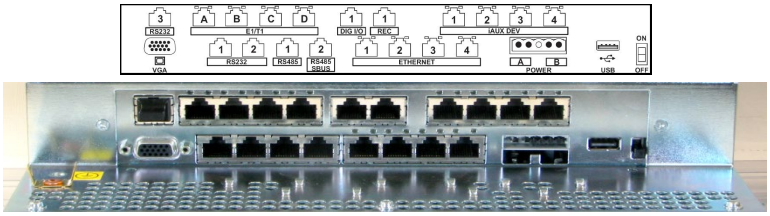

freigegeben
released

Overview: Variants with “STD” Mechanics and “LED” Display

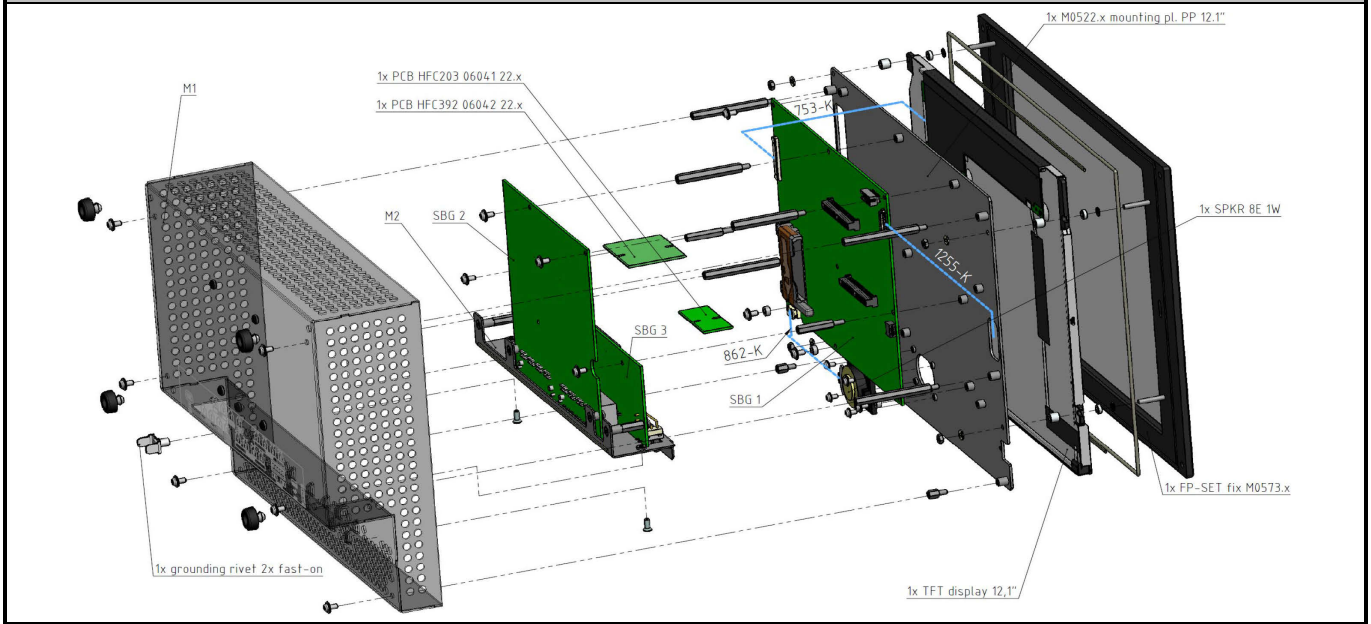

Main Components

- Standard casing (M1) — M0572
  - FP-Set – fixed — default M0573 - RAL7024; F 03 M0573 - RAL7040
  - incl. analog touch (DMC AST121) — 20-0000379
  - Connector feed-through plate (M2) — M0575
- iPOS - main board (SBG1) — F 01, F 03 40-0602800; F 04, F 06-08, F 09, iPOS2-F 03 40-0602802; F12, iPOS2-F 04, iPOS2-F 08 40-0602803; iPOS3-F 04, F 06, F 24, F 08, F 18 40-1700000
- iAUX 0x.00 aux-devices (SBG2) — default 40-0603000; F 07, F 08 40-0802000; F 06, F 24 (iAUX 01.10) 40-0603001
- iPOSIO - I/O sub-board. (SBG3) — default 40-0602900; F 06, F 08 40-0801900; iPOS3-F 04, F06, F24 40-1601100; iPOS3-F 08, F18 40-1601200
- Connection HFC203 (iPOS – iPOSIO) — 19-0004764
- Connection HFC392 (iPOS – iAUX) — 19-0004765
- LC-Display SVGA TFT 12.1" — 10-0009566
- Loudspeaker 8Ω 1W — 10-0005718
- Cable 862-K (iPOS - LSP) — 17-0862000
- Cable 753-K (TFT - iPOS) — 17-0753000
- Cable 1255-K (iPOS – LED) — 17-1255000

iPOS-F 01, iPOS-F 03, iPOS-F 04, iPOS-F 06, iPOS-F 07, iPOS-F 08, iPOS-F 09, iPOS2-F 12, iPOS2-F 04, iPOS2-F 08, iPOS2-F 03, iPOS3-F 04, F06, F24, iPOS3-F 08, iPOS3-F 18:

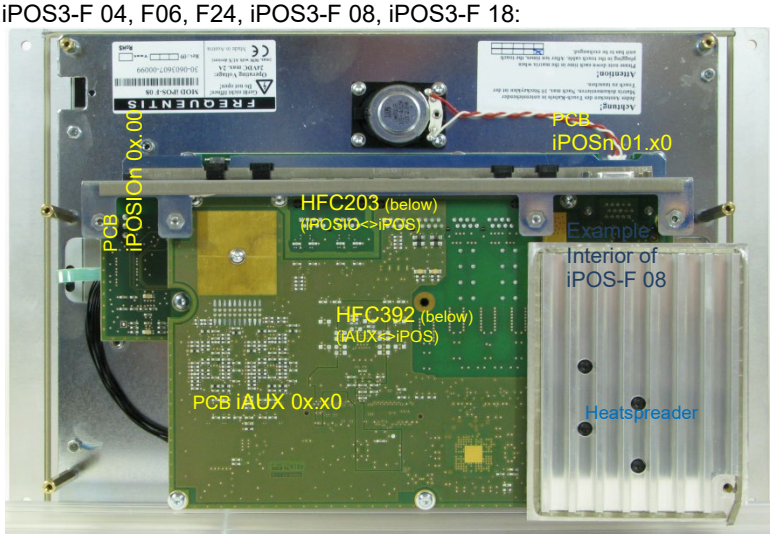

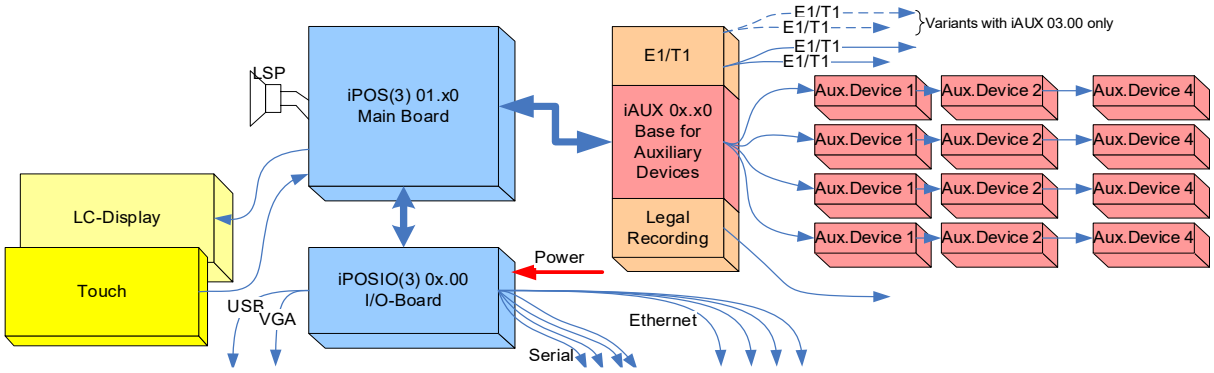

“STD” Mechanics and “LED” Display; Block Diagram iPOS

freigegeben
released

COPYRIGHT FREQUENTIS 2006

Overview iPOS-F 14: Variant with “PP05F” Mechanics and “LED” Display

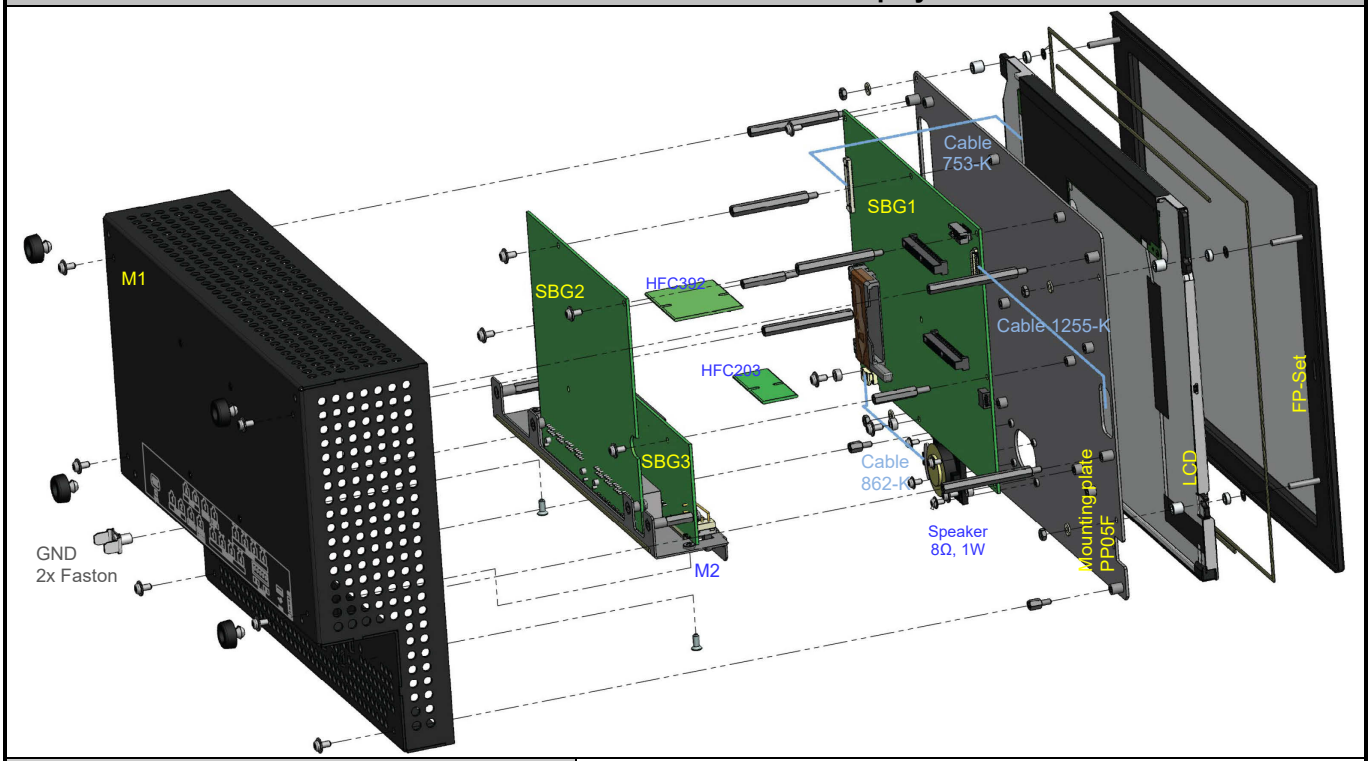

Main Components

• PP05F casing (M1)	M0572
▪ Connector feed-through plate (M2)	M0575
▪ Mounting plate	M0522
▪ Front panel set (6HUE×60HP)	M0683
incl. analog touch (DMC AST121)	20-0000379
• iPOS 01.10 main board (SBG1)	40-0602802
• iAUX 01.00 auxiliary devices sub-b. (SBG2)	40-0603000
• iPOSIO 01.00 I/O sub-board (SBG3)	40-0602900
• Connection HFC203 (iPOS – iPOSIO)	19-0004764
• Connection HFC392 (iPOS – iAUX)	19-0004765
• LC-Display SVGA TFT 12.1"	10-0009566
• Loudspeaker 8Ω 1W	10-0005718
• Cable 862-K (iPOS - LSP)	17-0862000
• Cable 753-K (TFT - iPOS)	17-0753000
• Cable 1255-K (iPOS – LED)	17-1255000

i The “PP05F” mechanics fits exactly for replacement of a position touch screen of type PP05F 03 (30-0602601).

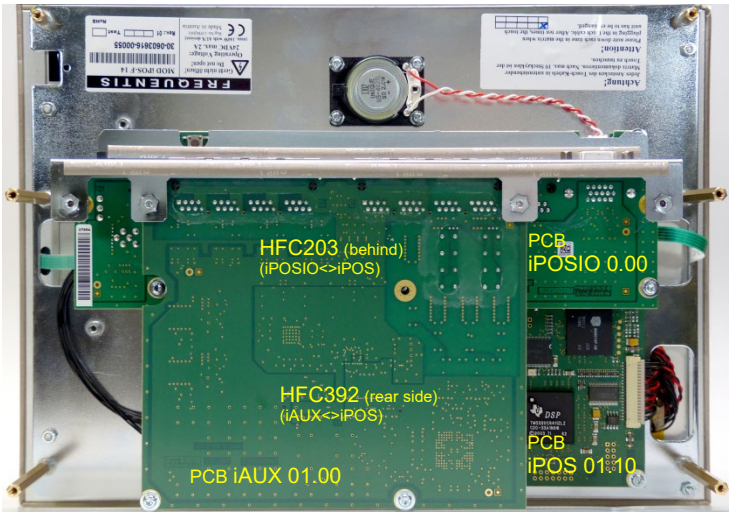

20-0000379	Analog Resistive Touch	AST121
ORDER NUMBER	FUNCTION	NAME

Physical Data	**12.1"Touch**
External size	262 × 199 mm²
View area	251 × 189 mm²
Active area	247 × 185.5 mm²
Tail length	80 mm
Panel thickness	2.1 mm
Suitable display (pitch 0.30mm)	800 x 600 dots
Suitable connector (pitch 1.25 mm)	4-pin, 90°
Transmissivity	>76 %
Input method	pen (tip R 0.8 mm), finger
Operating load	0.5±0.3 N
Lifetime	finger 10^6 hits, pen 10^5 characters
Surface finish	non-glare, ~pencil hardness >2H
Manufacturer	DMC

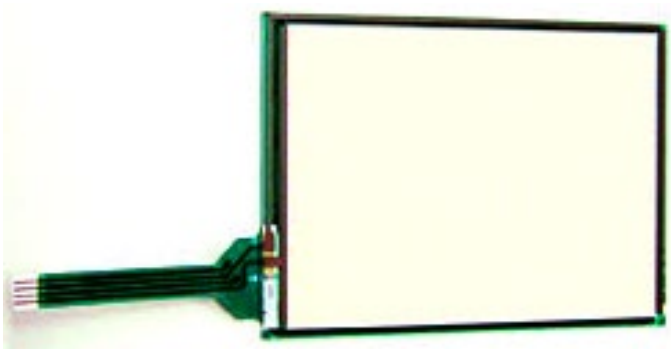

10-0009566	12.1" TFT-LCD Panel	LQ121S1LG88
ORDER NUMBER	FUNCTION	NAME

Mechanical Data		
Dimensions (W × H × D)		276.0 × 209.0 x 9.1 mm³
Active display area		246.0 × 184.5 mm²
Aspect ratio		4:3
Mass		750 g
Electrical Data		
Nominal voltage	TFT	3.3 ±0.3 V DC
	LED (max. range)	10.2 to 13.8 V DC
Power consumption		<8.2 W

Physical Data	
Brightness (typical)	450 cd/m²
Pixel pitch (H × V)	0.3075 × 0.3075 mm
Max. resolution	800 x 3(H) × 600(V) SVGA
Contrast ratio (typical)	800:1
Response time (tr+td)	30 ms
Display colours	262144
Viewing angle (contrast ratio > 10)	H: -80° to +80°; V: -80° to +60°
Video / Sync	RGB (vertical stripe) / LVDS 6-bit
Surface treatment	anti-glare, hard coated 3H
Manufacturer	SHARP

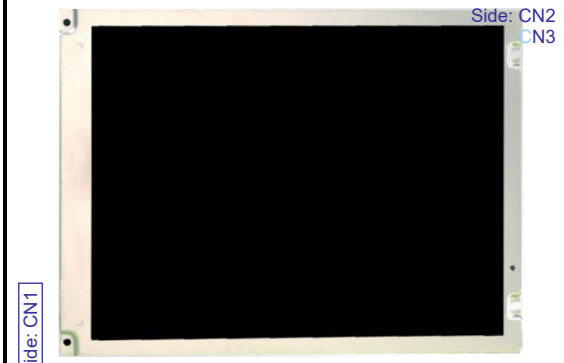

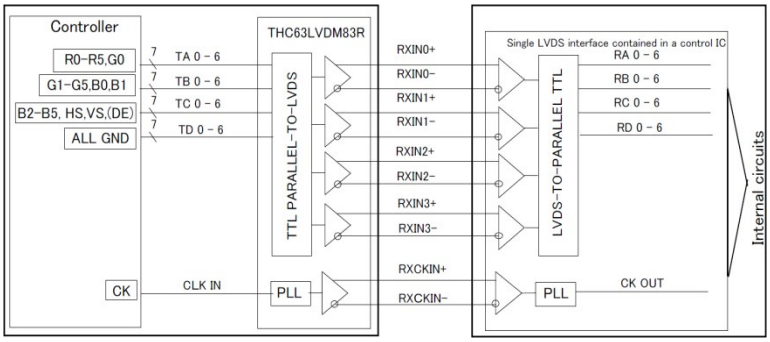

System Side *TFT-LCD Side*

1 Signal connector 20-pin	**CN1**:	LCD cable to the main board
1 Supply connector 6-pin	**CN2**:	LED backlight supply

freigegeben
released

COPYRIGHT FREQUENTIS 2006

Overview iPOS2-F 04 BW: Variant with “STD” Mechanics and “CCFL” Display

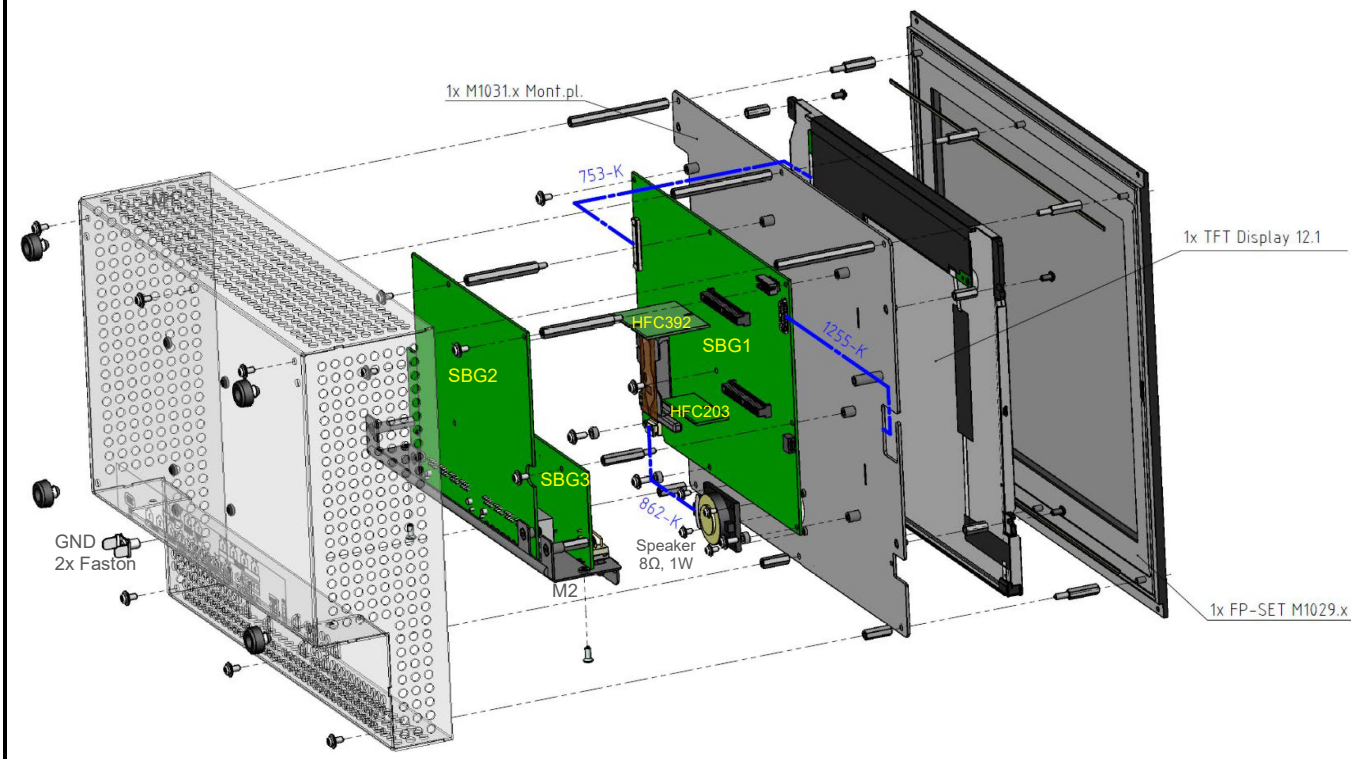

Main Components

• Standard casing (M1)		M0572
▪ Connector feed-through plate (M2)		M0575
▪ Mounting plate		M0522
▪ FP-Set – fixed	default	M0573
incl. analog touch (DMC AST121)		20-0000379
• iPOS 01.20 main board (SBG1)		40-0602803
• iAUX 01.00 aux-devices (SBG2)	default	40-0603000
• iPOSIO 01.00 I/O sub-b. (SBG3)	default	40-0602900
• Connection HFC203 (iPOS – iPOSIO)		19-0004764
• Connection HFC392 (iPOS – iAUX)		19-0004765
• LC-Display SVGA TFT 12.1"		10-0007215
• CCFL inverter module 12V 2×4W		10-0007212
• Loudspeaker 8Ω 1W		10-0005718
• Cable 862-K (iPOS - LSP)		17-0862000
• Cable 753-K (TFT - iPOS)		17-0753000
• Cable 861-K (iPOS – Inverter)		17-1255000

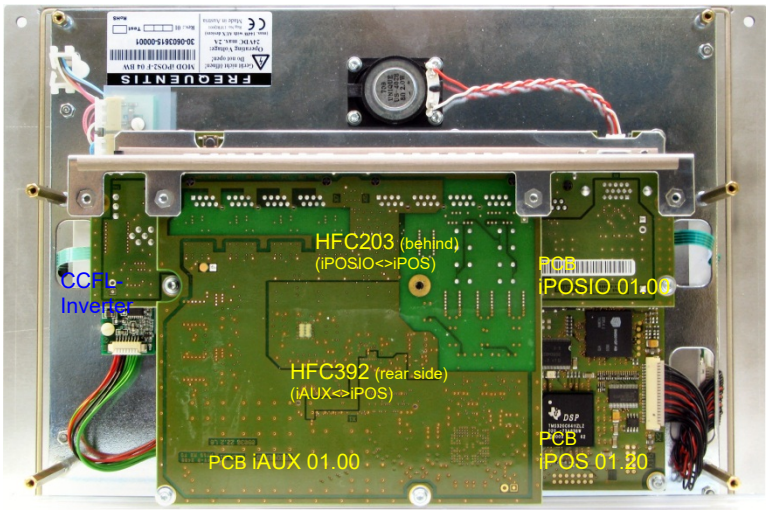

iPOS2-F 04 BW

freigegeben
released

Overview iPOS-F 11: Variant with “HDT” Mechanics and “LED” Display

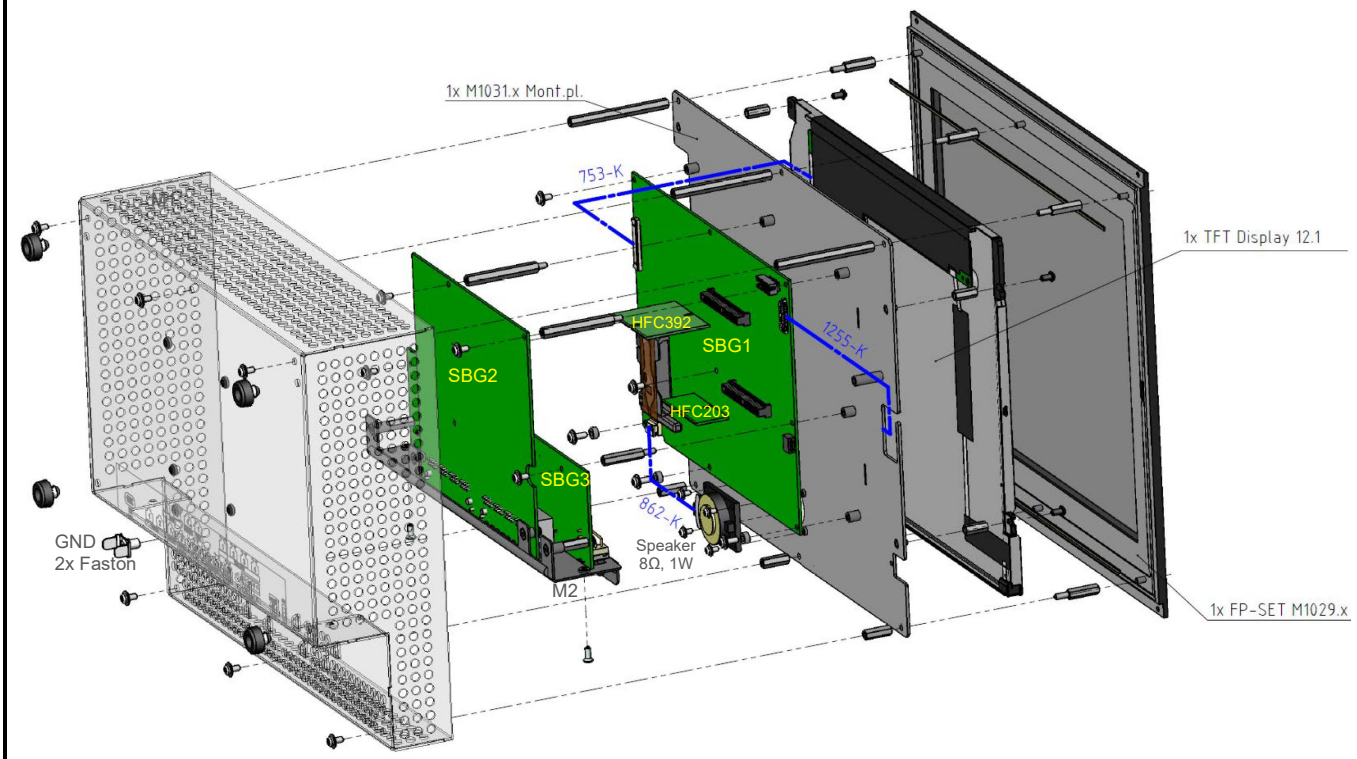

Main Components

• “High Bright” casing (M1)	M0650
▪ Connector feed-through plate (M2)	M0575
▪ Mounting plate	M1031
▪ Front panel set 6HUx60HP incl. analog touch (DMC AST121)	M1029 20-0000379
• iPOS 01.10 main board (SBG1)	40-0602802
• iAUX 01.00 auxiliary devices sub-b. (SBG2)	40-0603000
• iPOSIO 01.00 I/O sub-board (SBG3)	40-0602900
• Connection HFC203 (iPOS – iPOSIO)	19-0004764
• Connection HFC392 (iPOS – iAUX)	19-0004765
• LC-Display SVGA TFT 12.1"	10-0009566
• Loudspeaker 8Ω 1W	10-0005718
• Cable 862-K (iPOS - LSP)	17-0862000
• Cable 753-K (TFT - iPOS)	17-0753000
• Cable 861-K (iPOS – Inverter)	17-1255000

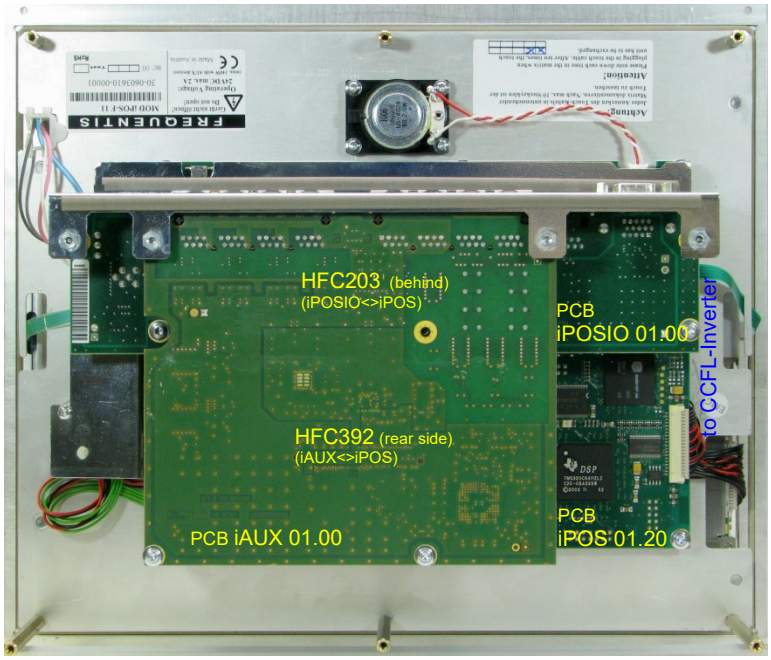

iPOS-F 11

freigegeben
released

COPYRIGHT FREQUENTIS 2006

10-0007215 ORDER NUMBER	**12.1" TFT-LCD Panel (SVGA Strong 2)** FUNCTION	**LQ121S1LG61** NAME
Mechanical Data	**Physical Data**	
Dimensions (W × H × D)	276.0 × 209.0 × 11.0 mm^3	Brightness (2 CCFT)	450 cd/m^2
Drillings (∅3.4, centred)	270.6 × L:188.5/R:138 mm^2	Pixel pitch (H × V)	0.3075 × 0.3075 mm
Active display area	246.0 × 184.5 mm^2	Max. resolution	800 x 3(H) × 600(V) SVGA
Mass	<800 g	Contrast ratio (typical)	600:1
Electrical Data		Response time (tr/tf)	10 / 25 ms
Nominal voltage	3.3 / 5.0 ±0.3 V DC	Display colours	262144
Current consumption	LCD, typ./max ~300/<450 mA	Viewing angle (typical)	H: -70° to +70°; V: -60° to +50°
	Lamp, at 1300 V_{RMS} <6.5 mA_{RMS}	Video / Sync	RGB (vertical stripe) / LVDS 6-bit
Power consumption	<8.5 W	Manufacturer	SHARP

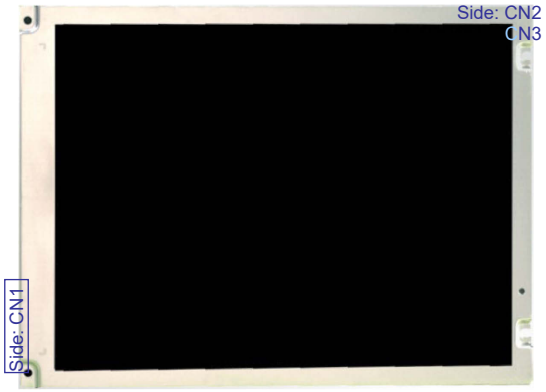

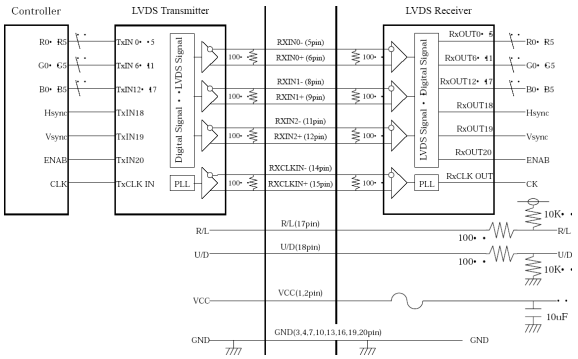

System Side *TFT-LCD Side*

1 Signal Connector 20-pin	**CN1**:	LCD cable to the main board
2 Input connectors 2-pin	**CN2**, **CN3**:	From the DCAC Inverter (V_{BLH}; V_{BLL}) to the backlight

freigegeben
released

Overview: Variants with “HD” Mechanics and “HB” (High Bright) Display

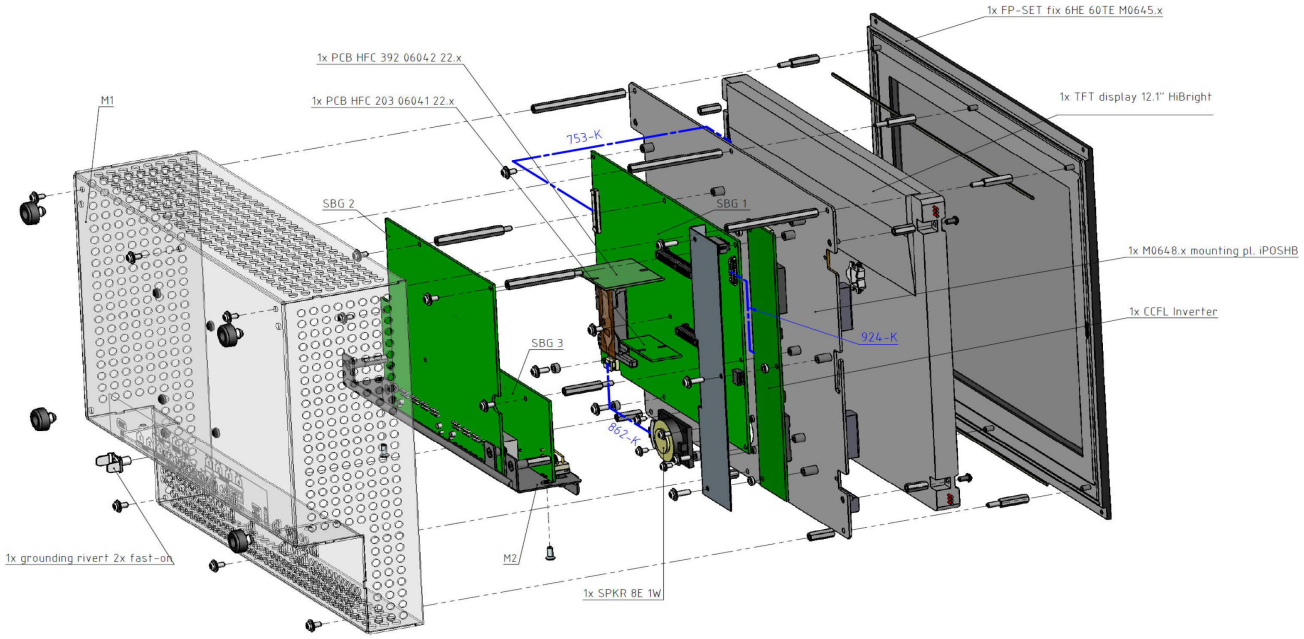

Main Components

- “High Bright” casing (M1) — M0650
  - Connector feed-through plate (M2) — M0575
  - Mounting plate — M0648
  - Front panel set (6HU×60HP) default — M0645
  - F15, F16 — M1029
  - incl. analog touch default GUNZE FRU-01 — 20-0000940
  - F15, F16 DMC AST121 — 20-0000379
- iPOSn 01.x0 main board (SBG1) F02, F16 — 40-0602800
  - F05, F10, F15 — 40-0602802
  - iPOS2-F05 — 40-0602803
- iAUX 01.x0 aux-devices sub-b.(SBG2) F10 — 40-0603002
  - F02, F05, F15 — 40-0603000
- iPOSIOn 01.00 I/O sub-board (SBG3) — 40-0602900
- Connection HFC203 (iPOS – iPOSIO) — 19-0004764
- Connection HFC392 (iPOS – iAUX) — 19-0004765
- DCAC converter LCD backlight — 10-0007206
  - incl. insulation foil M0649 — 19-0004868
- LC-Display High Bright TFT 12.1" — 10-0006951
- Loudspeaker 8Ω 1W — 10-0005718
- Cable 862-K (iPOS - LSP) — 17-0862000
- Cable 924-K (iPOS - Inverter) — 17-0924000
- Cable 753-K (TFT - iPOS) — 17-0753000

iPOS-F 02, iPOS-F 05, iPOS-F 10, iPOS2-F 05:

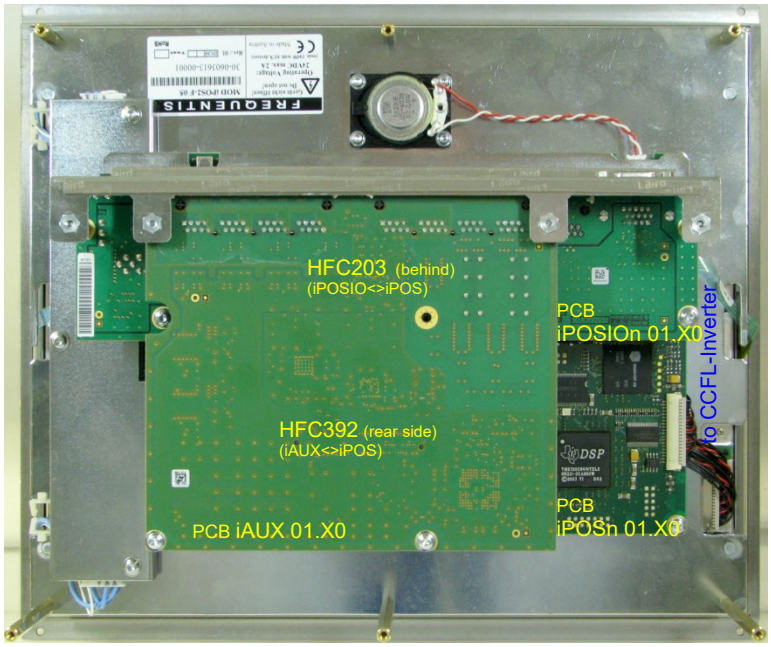

COPYRIGHT FREQUENTIS 2006

20-0000940 ORDER NUMBER	Analog Resistive Touch (High Bright) FUNCTION	FRU-01 NAME

Physical Data	12.1"Touch
External size	271 × 205 mm²
View area	216.0 × 163.3 mm²
Active area	247.8 × 186.3 mm²
Tail length	horizontal, 80 mm
Panel thickness	2.60 mm
Suitable connector (pitch 1.25 mm)	4-pin, 90°
Transparency	37 %
Actuation force	0.5 to 2.5 N
Surface finish	anti reflection coating, 2H
Manufacturer	GUNZE

20-0000379 ORDER NUMBER	Analog Resistive Touch FUNCTION	AST121 NAME

Physical Data	12.1"Touch
External size	262 × 199 mm²
View area	251 × 189 mm²
Active area	247 × 185.5 mm²
Tail length	80 mm
Panel thickness	2.1 mm
Suitable display (pitch 0.30mm)	800 × 600 dots
Suitable connector (pitch 1.25 mm)	4-pin, 90°
Transmissivity	>76 %
Input method	pen (tip R 0.8 mm), finger
Operating load	0.5±0.3 N
Lifetime	finger 10^6 hits, pen 10^5 characters
Surface finish	non-glare, ~pencil hardness >2H
Manufacturer	DMC

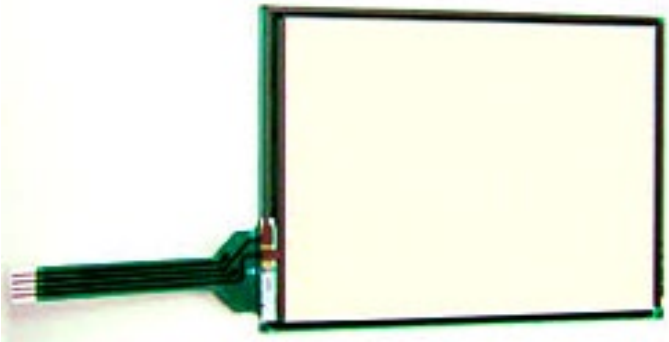

freigegeben
released

10-0006951 ORDER NUMBER	12.1" SVGA TFT-LCD Panel FUNCTION	T-52017D121J-FW-ABN NAME

Mechanical Data

Dimensions (W × H × D)	280.0 x 219 × 17.8 mm^3
Drillings (∅3.5mm,centre-centre)	272.2 × 181.3 mm^2
Active display area	246.0 × 184.5 mm^2
Mass	990 g

Electrical Data

Nominal voltage	+3.3 V DC ±10 %
Current consumption at 3.3 V	~300 <450 mA
Lamp, at 540 V_{RMS}	<18 mA_{RMS}
Power consumption (stationary)	<11.2 W

Physical Data

Brightness	1000 cd/m^2
Pixel pitch (H × V)	0.3075 × 0.3075 mm
Max. resolution	800 x 3(H) × 600(V) SVGA
Contrast ratio (optimum)	500:1
Response time (tr/tf)	10 / 30 ms
Display colours	256k(6-bit), 16M(8-bit)
Viewing angle (typical)	H: -65° - +65°; V: -75° - +45°
Pixel configuration	RGB (vertical stripe)
Video interface	LVDS 6-bit/8-bit
Backlight	Edge-lighting type, 4 CCFL, replaceable
Dimming range	10:1
Lifetime	50000 h
Manufacturer	OPTREX

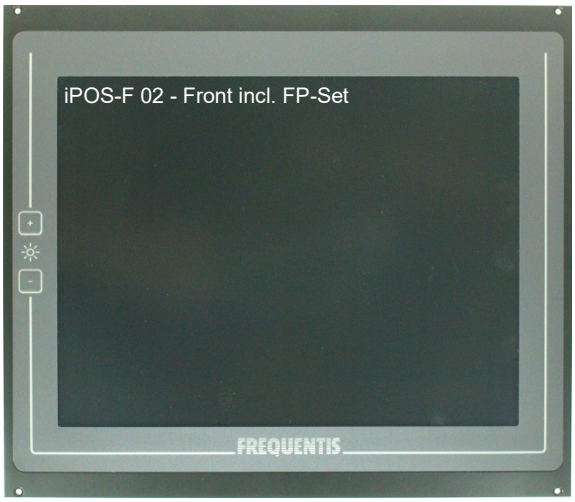

In case of operating under lower/higher operating temperature (<>25°C), the lamp exhaustion is accelerated and the brightness is reduced. In this case, exchange the lamp (the complete backlight unit can be exchanged. The units are available at OPTREX corporation).
Only personnel authorized by FREQUENTIS may maintain the module. Always disconnect the power supply before opening the unit!

The module is a colour active matrix TFT-LCD consisting of a 12.1" display, driver ICs, control and supply circuit and a backlight unit. 18-bit (6 bit/colour, 256k colours) source data is used for driving the active matrix. The TFT-LCD panel is a low-reflection and higher-colour-saturation type. The surface treatment is anti-reflective and hard-coating (2H).The DC/AC inverter for driving the backlight is not included proprietarily with the LCD module.

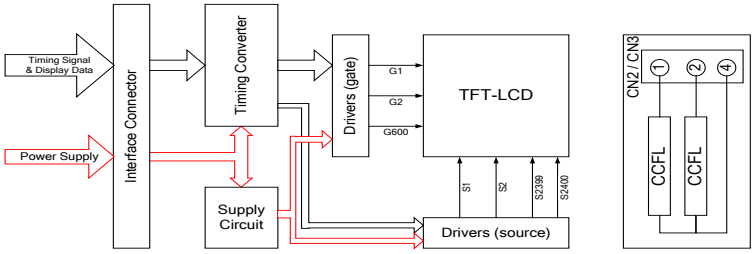

Connectors	ID	Pinning
1 Signal Connector 20-pin	**CN1**:	LCD cable to the main board
2 Input connectors 2-pin	**CN2**, **CN3**:	From the DCAC Inverters (V_{BLH}; V_{BLL}) to the backlight: V_{BLH} - V_{BLL} = V_L

freigegeben
released

COPYRIGHT FREQUENTIS 2006

Overview: Variants with “HD” Mechanics and different High Bright Display “nHB”

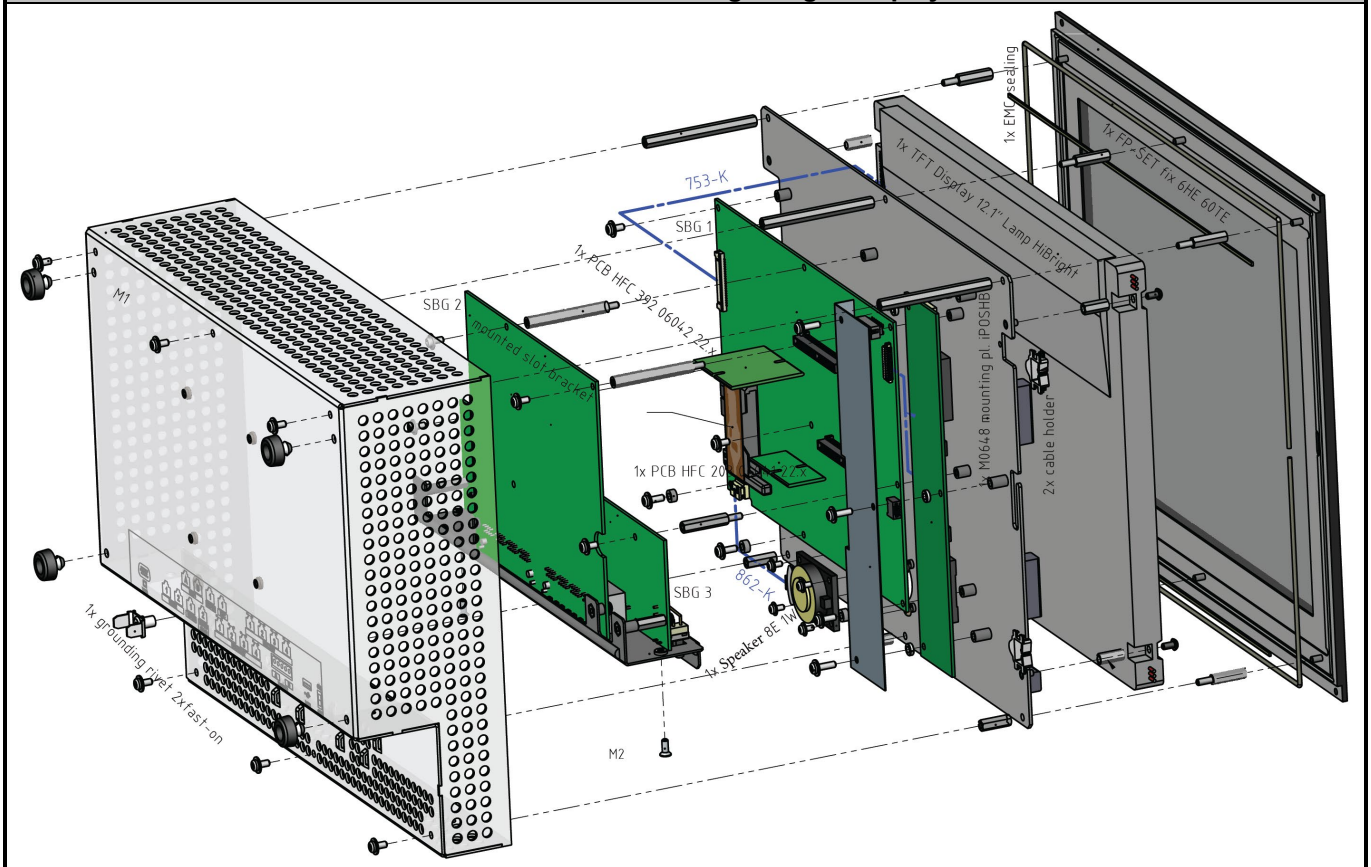

Main Components

• “High Bright” casing (M1)		M0650
Connector feed-through plate (M2)		M0575
	iPOS2-F 10	M0896
Front panel set (6HU×60HP)		M1271
incl. analog touch	Panjit	10-0008973
• iPOSn 01.20 main board (SBG1)		40-0602803
	iPOS3-F 05	40-1700000
• iAUX 01.00 aux-devices sub-b.(SBG2)		40-0603000
	iPOS2-F 25	40-0803200
• iPOSIOn 01.00 I/O sub-board (SBG3)		40-0602900
	iPOS3-F 05	40-1601100
• Connection HFC203 (iPOS – iPOSIO)		19-0004764
• Connection HFC392 (iPOS – iAUX)		19-0004765
• LC-Display High Bright TFT 12.1"		10-0008957
• Loudspeaker 8Ω 1W		10-0005718
• Cable 862-K (iPOS - LSP)		17-0862000
• Cable 753-K (TFT - iPOS)		17-0753000
• Cable 1255-LSF (LCD – iPOS)		17-1255000

iPOS2-F 25, iPOS3-F 05, iPOS2-F 10:

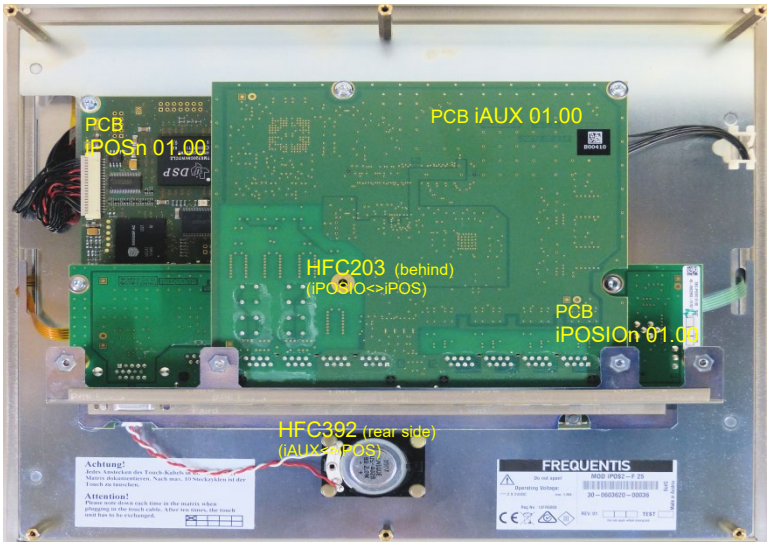

freigegeben
released

10-0008973	Analog Resistive Touch	12.1"-4-wire-FG-SRII-AR-AG
ORDER NUMBER	FUNCTION	NAME

Physical Data	12.1"Touch
External size	262 × 199 mm²
View area	251 × 189 mm²
Active area	247 × 185.5 mm²
Tail length	80 mm
Panel thickness	2.4 mm
Suitable connector (pitch 1.25 mm)	4-pin, 90°
Transmissivity	>78 %
Input method	pen (tip R 0.8-13 mm), finger
Operating load	0.5±0.3 N
Lifetime	finger 10^6 hits, pen 10^5 characters
Surface finish	anti-reflective, ~pencil hardness >2H
Manufacturer	Panjit

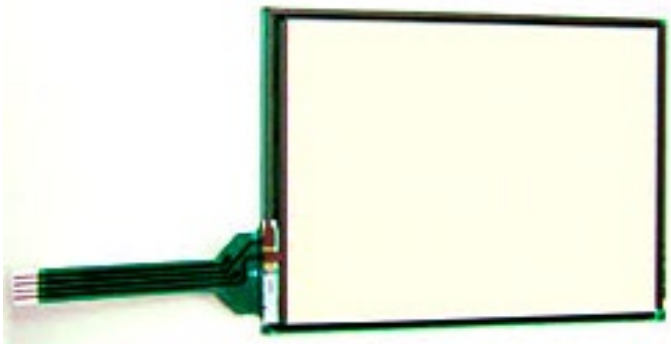

10-0008957	12.1" TFT-LCD Panel	LQ121S1LG86
ORDER NUMBER	FUNCTION	NAME

Mechanical Data

Dimensions (W × H × D)		276.0 × 209.0 x 9.1 mm³
Active display area		246.0 × 184.5 mm²
Aspect ratio		4:3
Mass		600 g
Electrical Data		
Nominal voltage	TFT	3.3 ±0.3 V DC
	LED (max. range)	10.2 to 13.8 V DC

Physical Data

Luminance of white (typical)	1500 cd/m²
Pixel pitch (H × V)	0.3075 × 0.3075 mm
Max. resolution	800 x 3(H) × 600(V) SVGA
Contrast ratio (typical)	800:1
Response time (tr+td)	30 ms
Display colours (18-bit)	262144
Viewing angle (contrast ratio > 10)	H: -80° to +80°; V: -60° to +80°
Video / Sync	RGB (vertical stripe) / LVDS 6-bit
Surface treatment	anti-glare, hard coated ≥3H
Manufacturer	Sharp

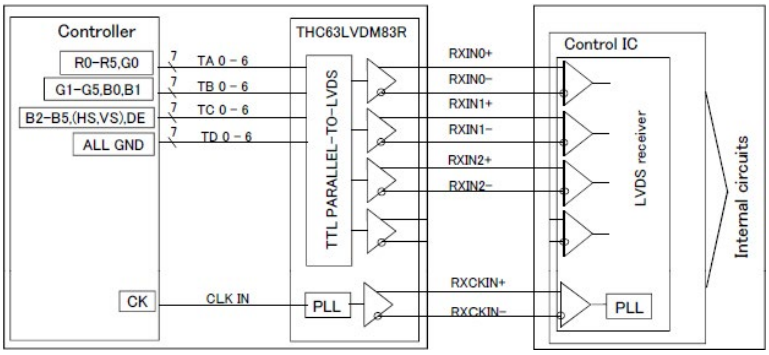

1 Signal connector 20-pin	CN1:	LCD cable to the main board
1 Supply connector 6-pin	CN2:	LED backlight supply

freigegeben
released

COPYRIGHT FREQUENTIS 2006

Installation

Only qualified and authorised personnel may open the casing!
Always disconnect mains power before opening the casing.

Mounting of Modules with Mechanics of Type "STD"

For mounting modules with "**STD**" **mechanics**, no specific fixing set is needed, since the module can be fixed with 4 screws either by means of the front panel (countersunk M4×20 mm e.g., drilling ∅ 4.5 mm) or by means of the rear plate (M3×6 mm, drilling ∅ 3.2 mm) on a swivel mechanism, e.g.. For an installation on mounting rails (e.g. top hat rail 35 mm), use specific safeguards.
Alternatively, the module can be placed on a desktop after installation into the Console Box.
To be on the safe side, provide approximately 5 cm mounting depth behind the module (total mounting depth >13 cm) for the cable running.

Risk of damage! When mounting the module using the rear VESA drilling holes, too long screws can damage or shorten its sub-board. Use only screws with max. 6 mm screw-in depth!

To avoid overheating of the module, the mounting must not inhibit the air flow through the perforated parts of the casing!

The "STD" mechanics fits for replacement of PP04 (30-98104xx) if the PP04 was mounted using the fixing set order no. 19-0003662 (angle irons left/right).

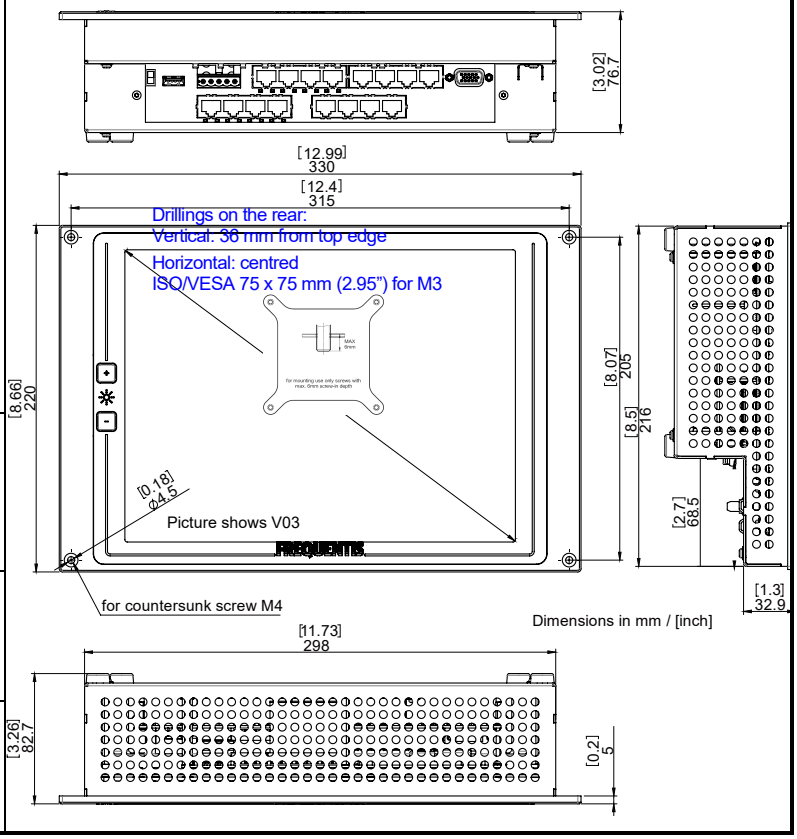

19-0005124	Console Box (Option)	M0732
ORDER NUMBER	FUNCTION	NAME

Mechanical Data

Casing (W × H × D)	330 × 220 × 77 mm³
with thread (M4, centre-centre)	315 × 205 mm
Material	steel sheet metal 1.5 mm
Surface	powder coated RAL 9005 bk, sm
Mass	~1 kg

The console box can be used for desk-based set-up of variants with "STD" mechanics, simply to be screwed on the four thread nuts (M4). 2×4 nuts (M3) in the bottom of the case can be used for wall or pedestal mounting (VESA dim compliant).

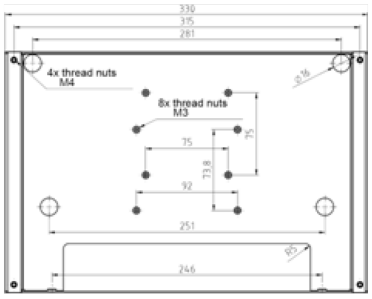

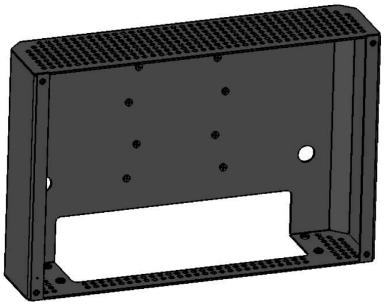

freigegeben
released

Mounting of Modules with Mechanics of Type ”HD” and “HDT”

For mounting modules with “**HD**” or “**HDT**” **mechanics**, no specific fixing set is needed, since the module can be fixed with 4 screws either by means of the front panel (countersunk M2.5/3×20 mm e.g., drilling ∅ 3.2 mm) or by means of the rear plate (M3x6 mm, drilling ∅ 3.2 mm) on a swivel mechanism, e.g..
For an installation on mounting rails (e.g. top hat rail 35 mm), use specific safeguards.
To be on the safe side, provide approximately 5 cm mounting depth behind the module (total mounting depth >13 cm) for the cable running.

To avoid overheating of the module, the mounting must not inhibit the air flow through the perforated parts of the casing! In addition, use metal plates (or equivalent material with high heat conductivity) as installation base for modules with high-bright display.

Risk of damage! When mounting the module using the rear VESA drilling holes, too long screws can damage or shorten its sub-board. Use only screws with max. 6 mm screw-in depth!

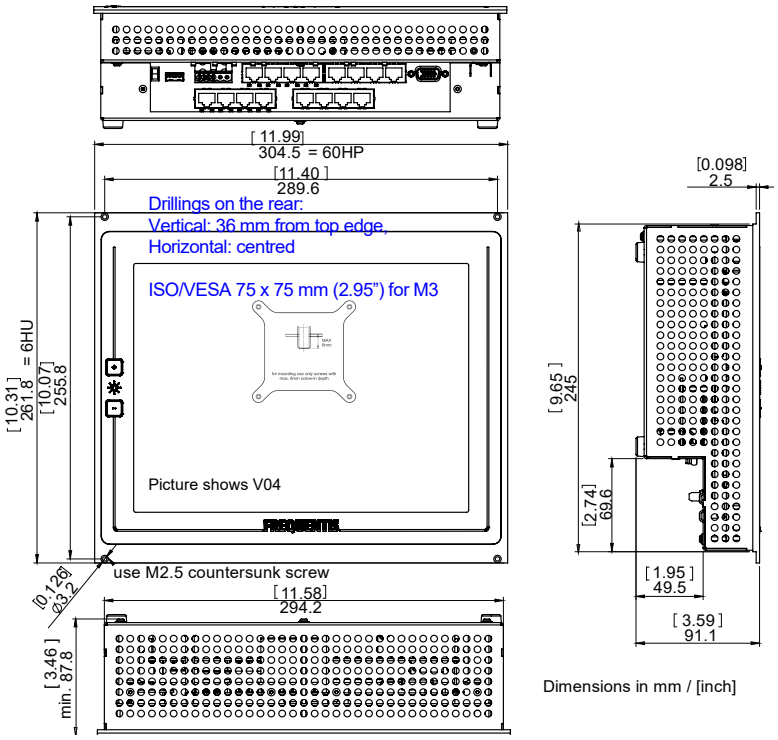

Mounting of Modules with Mechanics of Type ”PP05F”

Modules with **“PP05F” mechanics** can be placed on a desktop or wall-mounted by means of the rear plate (M3×6 mm, drilling ∅ 3.2 mm) on a swivel mechanism, e.g..
To be on the safe side, provide approximately 5 cm mounting depth behind the module (total mounting depth >13 cm) for the cable running.

To avoid overheating of the module, the mounting must not inhibit the air flow through the perforated parts of the casing!

Risk of damage! When mounting the module using the rear VESA drilling holes, too long screws can damage or shorten its sub-board. Use only screws with max. 6 mm screw-in depth!

The “PP05F” mechanics fits exactly for replacement of a position touch screen of type PP05F 03 (30-0602601).

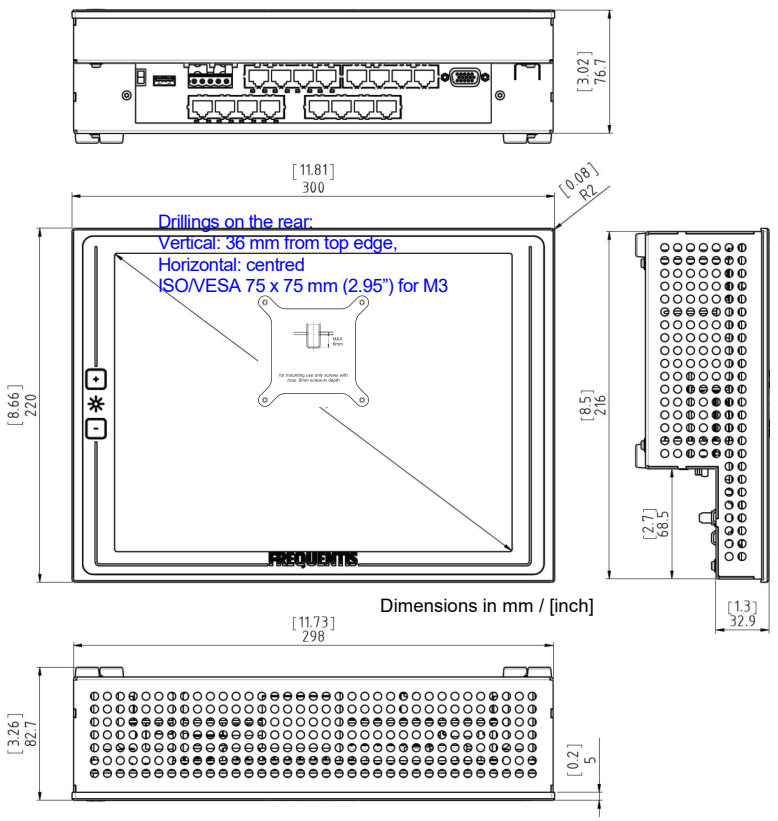

COPYRIGHT FREQUENTIS 2006
freigegeben
released

Power Supply

To avoid cable burn-out due to short circuits (in case of negative DC supply voltage) and/or to avoid cross currents, a DC/DC converter has to be interconnected on the supply line.

To comply with the EMC-standards, the cable length between the module and the voltage converter must not exceed 10 m!
For EMC and EMI, connect the module's earthing terminal to the site's equipotential bonding system.

The module can be supplied duplicated with DC voltage via the 5-pin (1 coding pin) header on the rear.

To comply with the standards, the module has to be supplied in case of primary AC by means of one of the following AC/DC converters

Model	*Max. Current*	*Order No.*
GST160A24-R7B	6A	20-0003760
TRH70A240-19E13 (≤4 AUX-dev.)	3A	20-0002952
In case of primary DC, use the voltage converter		
PULS CD5.241	6A	20-0001491

The AC/DC converter GST160A24-R7B (20-0003760) consists of two parts, the converter itself and the Filter Cable (10-0009321). The AC power cable is not part of the converter and has to be ordered separately. If less than 4 AUX-devices are used the 3A AC/DC converter TRH70A240 (20-0002952) can be used. Other power configurations have to be agreed with Frequentis. If more than one loudspeaker (iLSP 13, e.g.) is used on an AUX-line, those speaker(s) have to be supplied separately.

To avoid mixing up the polarity of a supply line fail-safe, any supply connection requires the use of a female 2-pin terminal block WAGO 231-102.

For the GS160A24, the PSU-holder M0589 (19-0004852) can be used for mounting the unit on a DIN rail.

In case of non-redundant supply, the unused power input has to be covered with a cover strip (10-0007336).

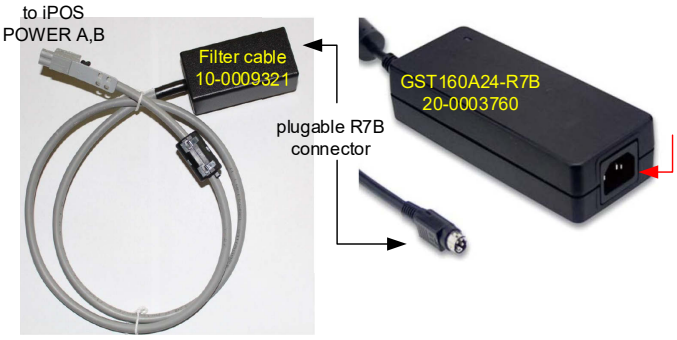

Cabling

All connectors connect to SELV circuits (according to IEC/EN60950). The externals (ETHERNET 1 – 4) connected via sockets are protected against overvoltages (Electrical Fast Transients acc. EN61000-4-4). The module's earthing terminal has to be connected to the site's equipotential bonding system.

For proper operation, all cables must be secured stress relieved, fixing them with cable ties to the provided cable clamping in front of the jacks on the rear of the module. The serial interface connectors RS485-1 and RS232-1,-2 are solely intended for development and production purposes and shall not be used by the customer!

Note that each iPOS or connected module (iPIPS or iLSP) is capable of connecting up to 2 footswitches (if supported by the audio matrix).

Risk of mechanical damage!
For strain relief, fasten all cables with cable ties to the box lugs in front of the jacks.

Cable List (Example)

#	FROM	Cable Type	Length [m]	Order Number	TO	Use	Remarks
1/2	**POWER A, B**	Filter cable 1008-LSF	1.1; various	10-0009321 17-100800x	GST160A24-R7B; PULS CD5.241	AC- voltage DC- converter	Cables on the primary side are concern of the customer
1	**VGA**	various	various	commercial type	2nd Monitor		VGA connector (cable depends on monitor used)
1	**USB**	USB type A	< 5	commercial type	USB device	various	Universal Serial Bus 2.0
≤2	**E1/T1**	499-LSF	≤1000 m	17-049900x	e.g. GateX	Core switch	PCM30 lines to core switch
≤1	**DIG I/O**	434-LSF	various	17-043400x	DF	Alarm, contact	Digital in-/outputs
≤1	**REC**	434-LSF	various	17-043400x	DF	Recorder, speaker	Regarding the LS outputs, any load has to be coupled fully isolated from earth between LS+ and LS-.
2	**RS485/SBUS**	1:1 RJ45	various	≥CAT5		SBUS, serial	RS485/422 compatible
2	**RS232**	762-K	3	17-0762000	PC	Test interface	RS232 compatible
≤4	**Ethernet**	1:1 RJ45	<100	≥CAT5	Router	LAN	LAN connections CAT5; 100BaseTx
	E1/T1 (ETH pinning)	1071-LSF	<100	17-1071xxx	BGT CIF, GateX	Switch	Connection to core switch via IP (using DIF6 board)
					BGT CIF 12k / S		Connection to core switch via E1/T1 (using JIF6 board)
≤2×4		FOC	Multimode duplex FC-FC		Optical ring; position to core switch		IP/Ethernet connections via fibre optic cables
≤4	**iAUX DEV**	713-LSF	<90	17-071300x	iPIP(S), iLAP-D, iLSP, iARM	iAUX DEV IN	AUX-line for up to 4 auxiliary devices (iPIP(S), iLSP (also with RES-Q) iLAP-D, some recorder)
	EMOD	956-LSF	3	19-09560x	iPIPS 02	RES-Q audio Loopback$_{RES-Q}$	Common use of iPOS audio devices together with the Radio Emergency System RES-Q
	iPIPS 02	957-LSF	3	19-09570x	EMOD		
		772-LSF	1	17-0772000	iPIPS 02		
≤4	-	869-K	0	17-0869000	iAUX DEV OUT	Loopback$_{AUX}$	at last AUX-device of each AUX-line

freigegeben
released

COPYRIGHT FREQUENTIS 2006

Wiring Diagram

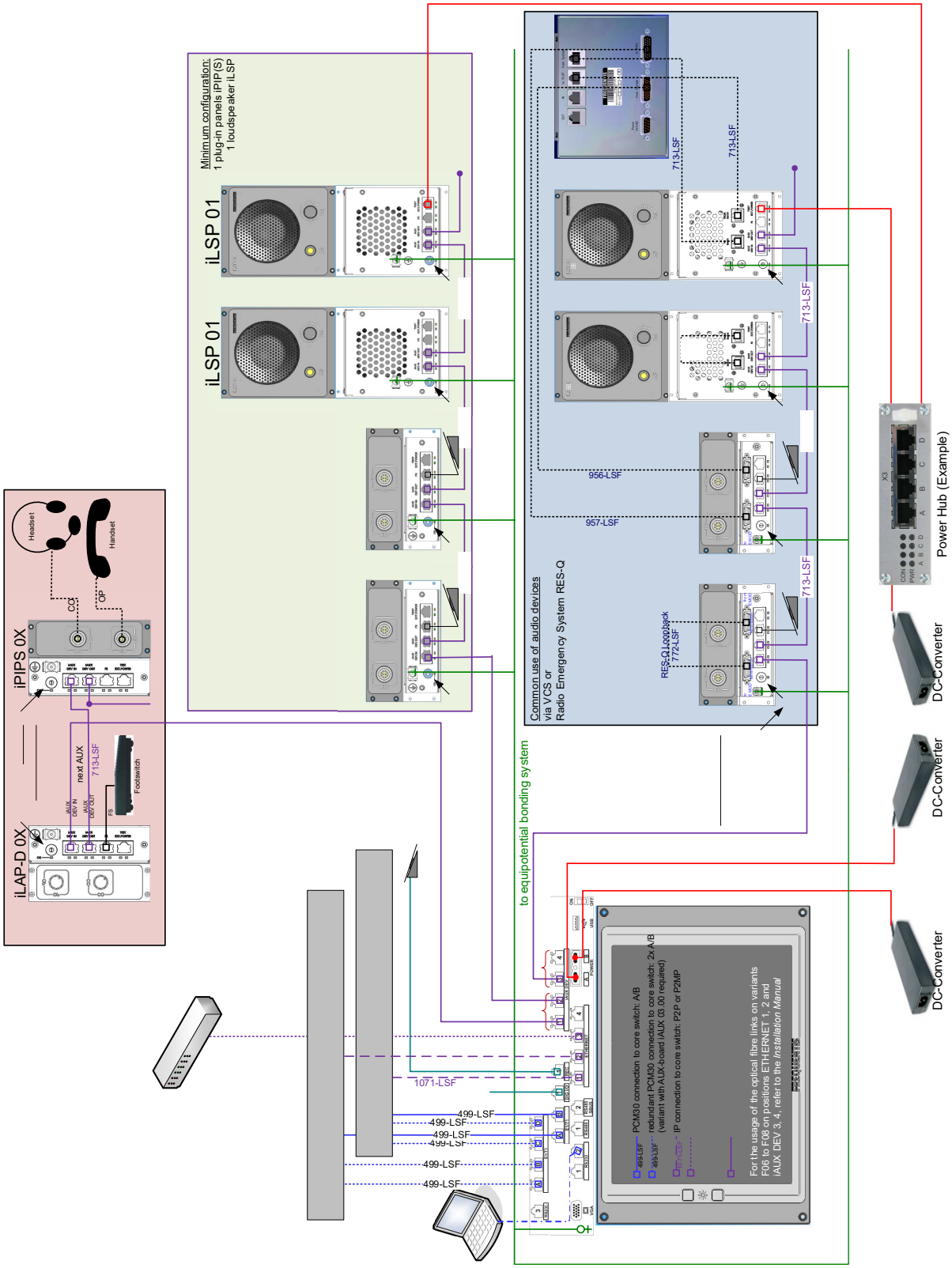

freigegeben
released

Blue	analog lines
Red	digital lines/contacts
Green	supply & earth
Violet	F09/10/12, 2-F10 only
Light blue	F06/07/08 only
Orange	"copper" var. only

Pinning of the Rear Connectors

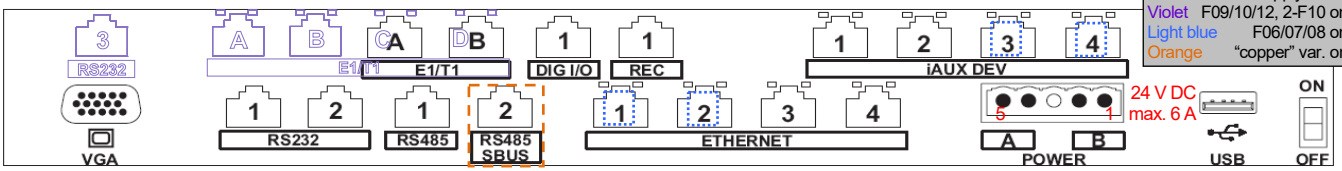

For connector layout of specific variants, refer also to page 3.

VGA — 15-p Sub-D, fm

Pin	Label/Signal	Type	Description	Pin	Signal	Type	Description	Pin	Signal	Type	Description
1	CRT_RED	OUT	Red signal	6	DGND	SELV	Red earth	11	-		(connected to p10)
2	CRT_GREEN	OUT	Green signal	7	DGND	SELV	Green earth	12	CRT_SDA	OUT	Serial data
3	CRT_BLUE	OUT	Blue signal	8	DGND	SELV	Blue earth	13	CRT_HSYNC	OUT	Horizontal sync
4	-		n.c.	9	-		reserved	14	CRT_VSYNC	OUT	Vertical sync
5	DGND	SELV	Digital earth	10	GND	SELV	Earth for sync	15	CRT_SCL	OUT	Clock data

Connector/ Plan: VGA Connector — Ref. on PCB: $X1_{iPOSIO}$

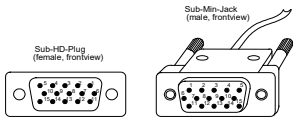

	1, 2 RS232	3 RS232 (F09,-10, 2F12 only)	RJ45	Description	1 RS485 (4-w)	2 RS485 SBUS (2/4-w)	RJ45	Description
1	-	EXT_RS232_RTS	RS232	Request to send	-	-		n.c.
2	-	EXT_RS232_CTS	RS232	Clear to send	-	-		n.c.
3	DGND	EXT_RS232_RXD	RS232	Earth / Rx	PPC0_SDI_B	(PPC1_SDI_B)	RS422	Rx B
4	MPC_UART0/1_Tx	-	RS232	Transmit / n.c.	PPC0_SDO_A	PPC1_SDIO_A	RS422	Tx(Rx) A
5	MPC_UART0/1_Rx	-	RS232	Receive / n.c.	PPC0_SDO_B	PPC1_SDIO_B	RS422	Tx(Rx) B
6	-	EXT_RS232_TXD	RS232	n.c ./ Tx	PPC0_SDI_A	(PPC1_SDI_A)	RS422	Rx A
7	-	DGND		n.c. / earth	-	-		n.c.
8	-	DGND		n.c.. / earth	-	-		n.c.

2/4-w Serial Interfaces — $X4_{iPOSIO}$ — X_RS232_{iAUX03}

Serial Levels	Ext_, MPC_, PPCx_
RS232	acc. EIA/TIA 232
RS422	acc. EIA/TIA 422
RS485	acc. EIA/TIA 485

Optocoupled Outputs 0DIG_OUT_0/1
Type: dry contact, isolated
Max. current I_{MAX} 120 mA
Contact restistance R_{MAX} 25 Ω

	A/B/C/D E1/T1*)	RJ45	X5-C/D$_{iAUX}$ (X_PCM$_{iAUX03}$)	1 REC	RJ45	X5-B$_{iAUX}$	1 DIG I/O	RJ45	X5-A$_{iAUX}$
1	LINE_IN_A1/2		T1: IN	LS0_PP	OUT	Audio line 0, +	0DIG_OUT0_A	OUT	GPO line 0
2	LINE_IN_B1/2		T1: IN	LS0_PM	OUT	Audio line 0, -	0DIG_OUT0_B	OUT	GPO line 0
3	LINE_OUT_A1/2	E1: OUT		LS1_PP	OUT	Audio line 1, +	0DIG_OUT1_A	OUT	GPO line 1
4	LINE_IN_A1/2	E1: IN	T1: _OUT_	BDIG_IN_0	IN	GPI line 0	BDIG_IN0	IN	GPI line 0
5	LINE_IN_B1/2	E1: IN	T1: _OUT_	DGND		Digital earth	DGND		Earth
6	LINE_OUT_B1/2	E1: OUT		LS1_PM	OUT	Audio line 1, -	0DIG_OUT1_B	OUT	GPO line 1
7	-		n.c.	0DIG_OUT0_A	OUT	GPO line 0	BDIG_IN1	IN	GPI line 0
8	-		n.c.	0DIG_OUT0_B	OUT	GPO line 0	DGND		Earth

Buffered Inputs BDIG_IN_0/1
Type: TTL vs. GND
Voltage 0V ≤ U_{IL} ≤ 0.8V, 3.0V ≤ U_{IH} ≤ +24V

Audio Levels LS0/1_PM/P
Type: Balanced 2-wire recording output from class-D amplifier on iAUX 01.00 or 03.00 with suitable for speaker / recorder with
Impedance load 8 Ω (option: 4 Ω) / 600 Ω
Frequency range 300 to 3400 Hz
Level OUT range -47 to +7 dB_{775}
nominal -20 dB_{775}
Variants with iAUX 02.00 -20 to +5 dB_{775}
Idle Noise ≤ -65 dB_{775}

	1 ETHERNET		2 ETHERNET		3 ETHERNET	4 ETHERNET	RJ45		Colour Code (with 713-LSF, e.g.)
1	SW0_TxP	SW0_Tx (SM/MM)	SW1_TxP	SW1_Tx (SM/MM)	SW2_TxP	SW3_TxP	ETH	Transmit +	White-Green
2	SW0_TxN		SW1_TxN		SW2_TxN	SW3_TxN	ETH	Transmit -	Green
3	SW0_RxP		SW1_RxP		SW2_RxP	SW3_RxP	ETH	Receive +	White-Blue
4	-		-		-	-			White-Orange
5	-	SW0_RX (SM/MM)	-	SW1_RX (SM/MM)	-	-			Orange
6	SW0_RxN		SW1_RxN		SW2_RxN	SW3_RxN	ETH	Receive -	Blue
7	-		-		-	-		-	White-Brown
8	-		-		-	-		-	Brown

LAN-Connections — $X8_{iPOSIO}$

Ethernet	SWx_, AUXx_
Levels	acc. IEEE 802.3
E1/T1	**LINE_**
Levels	acc. ITU-T G.703

	1 iAUX DEV	2 iAUX DEV	3 iAUX DEV		4 iAUX DEV		RJ45	
1	AUX0_TxP	AUX1_TxP	AUX2_TxP	AUX2_Tx (SM/MM)	AUX3_TxP	AUX3_Tx (SM/MM)	ETH	Transmit +
2	AUX0_TxN	AUX1_TxN	AUX2_TxN		AUX3_TxN		ETH	Transmit -
3	AUX0_RxP	AUX1_RxP	AUX2_RxP		AUX3_RxP		ETH	Receive +
4	AUX01_PWR	AUX01_PWR	AUX23_PWR		AUX23_PWR		SELV	+24V Supply
5	AUX01_PWR	AUX01_PWR	AUX23_PWR	AUX2_Rx (SM/MM)	AUX23_PWR	AUX3_Rx (SM/MM)	SELV	+24V Supply
6	AUX0_RxN	AUX1_RxN	AUX2_RxN		AUX3_RxN		ETH	Receive -
7	DGND	DGND	DGND		DGND		SELV	Earth
8	DGND	DGND	DGND		DGND		SELV	Earth

Auxiliary Devices — $X7_{iAUX}$

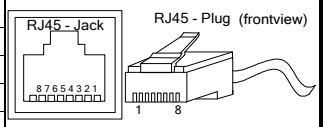

	POWER Wago 5-p		Supply	X3 iPOSIO
1	24V_1	SELV	24V input **B**	
2	GND	SELV	Earth	
3	-		n.c. (coding pin)	
4	24V_2	SELV	24V input **A**	
5	GND	SELV	Earth	

Pin	USB Type A		4-p Connector	X5iPOSIO
1	5V_USB_OUT	SELV	+5V supply (≤2.5W)	
2	USB_DM	USB	Data, -	
3	USB_DP	USB	Data, +	
4	USB_GND	SELV	Earth	

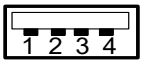

Levels acc. USB Rev.2.0

*) E1/T1 A/B with pinning for T1 configuration requires an iAUX variant populated differently (option).

PCM30 lines C, D ("4-fold PCM") are only available for variants with sub-board iAUX 03.00 (all lines configured for E1)

freigegeben
released

This document is subject to change without notice.